8.2 Main Amp/Power Supply (P701) Schematic Diagram and Component Locations

PM-64

RTV servis Horvat
Kešinci, 31402 Semeljci
031-856-139
031-856-637
098-788-319
rtv-servis-horvat@os.tcl.hr
Croatia

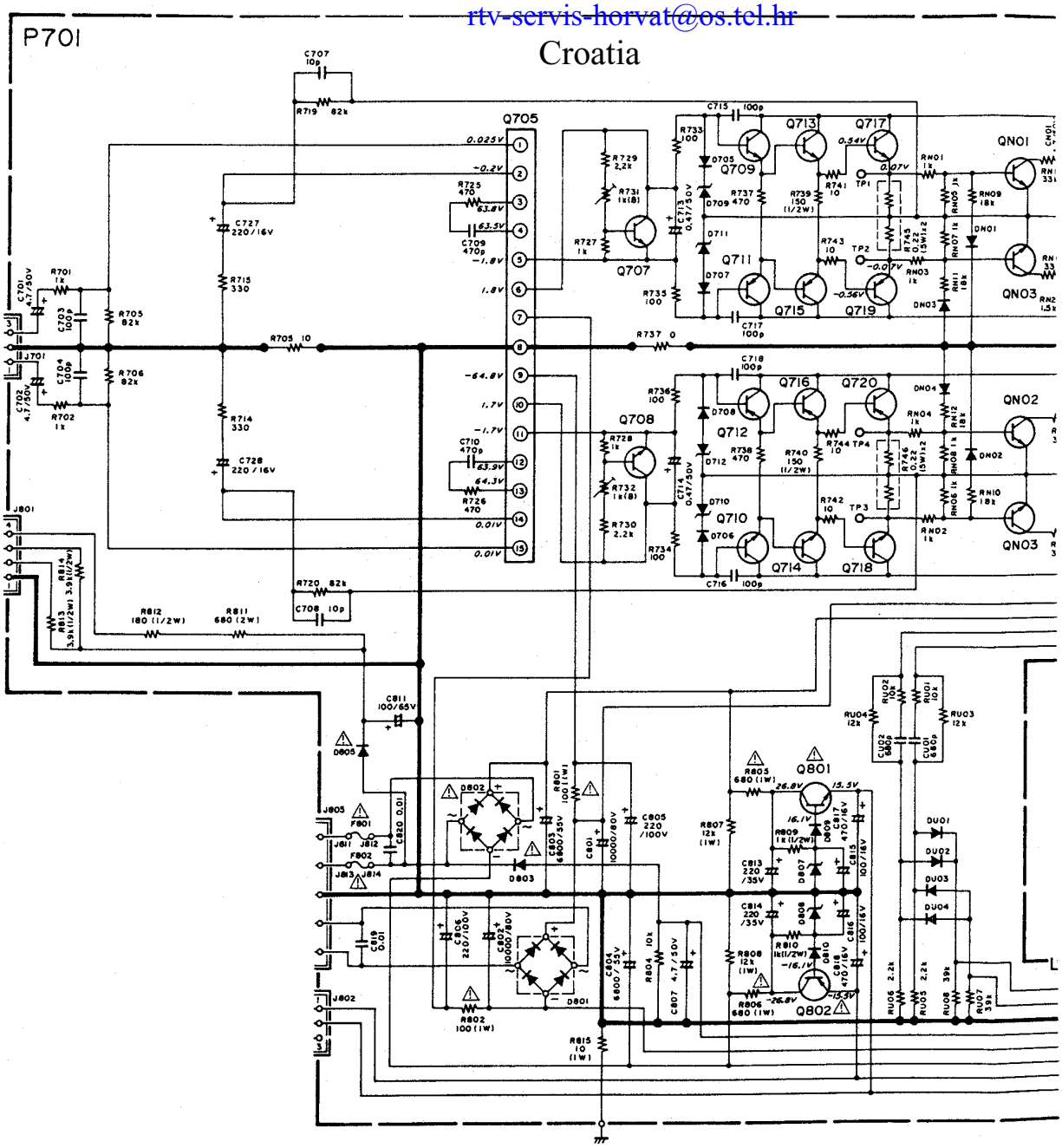

www.rtv-horvat-dj.hr

agram and Component Locations

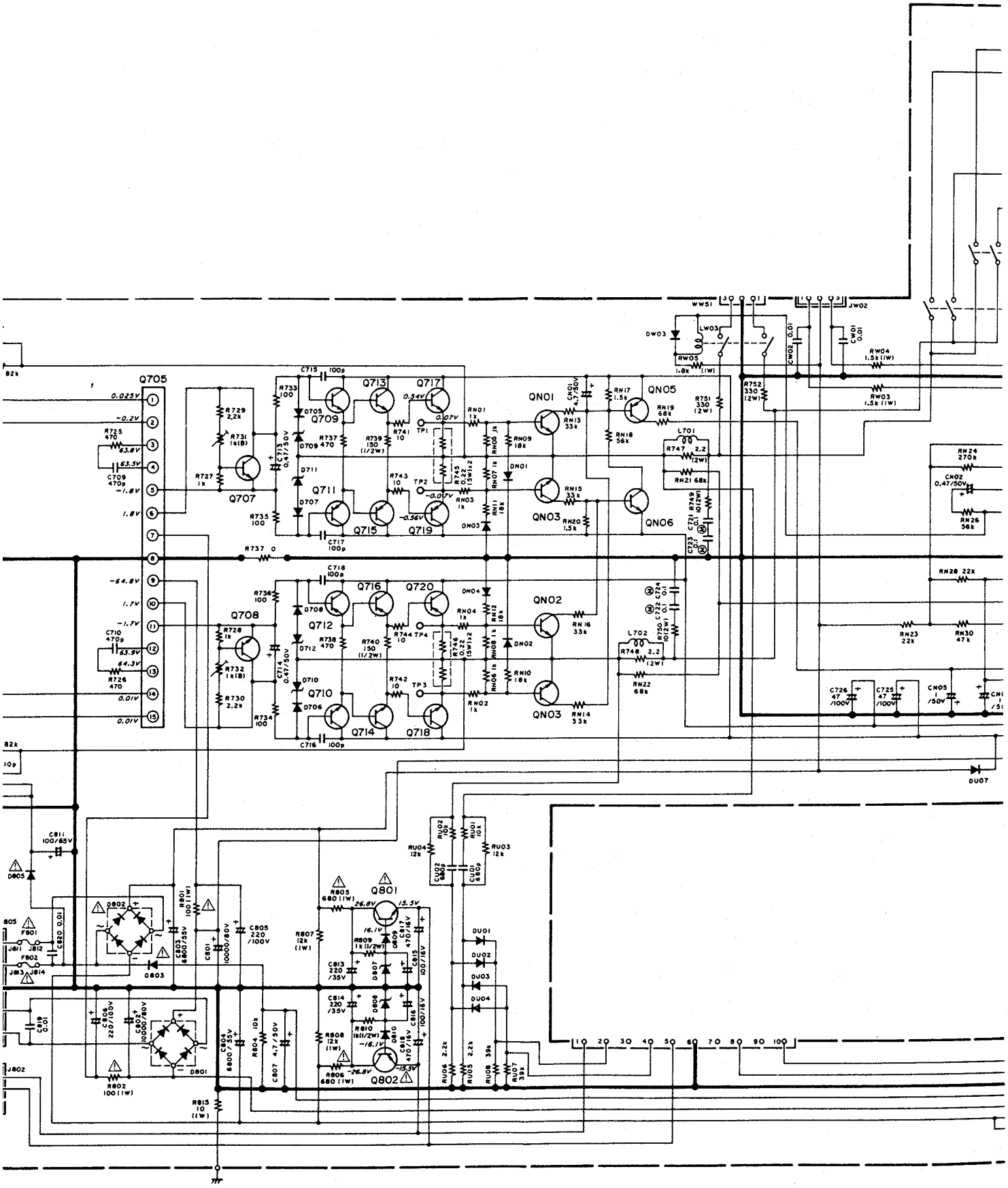

www.rtv-horvat-dj.hr

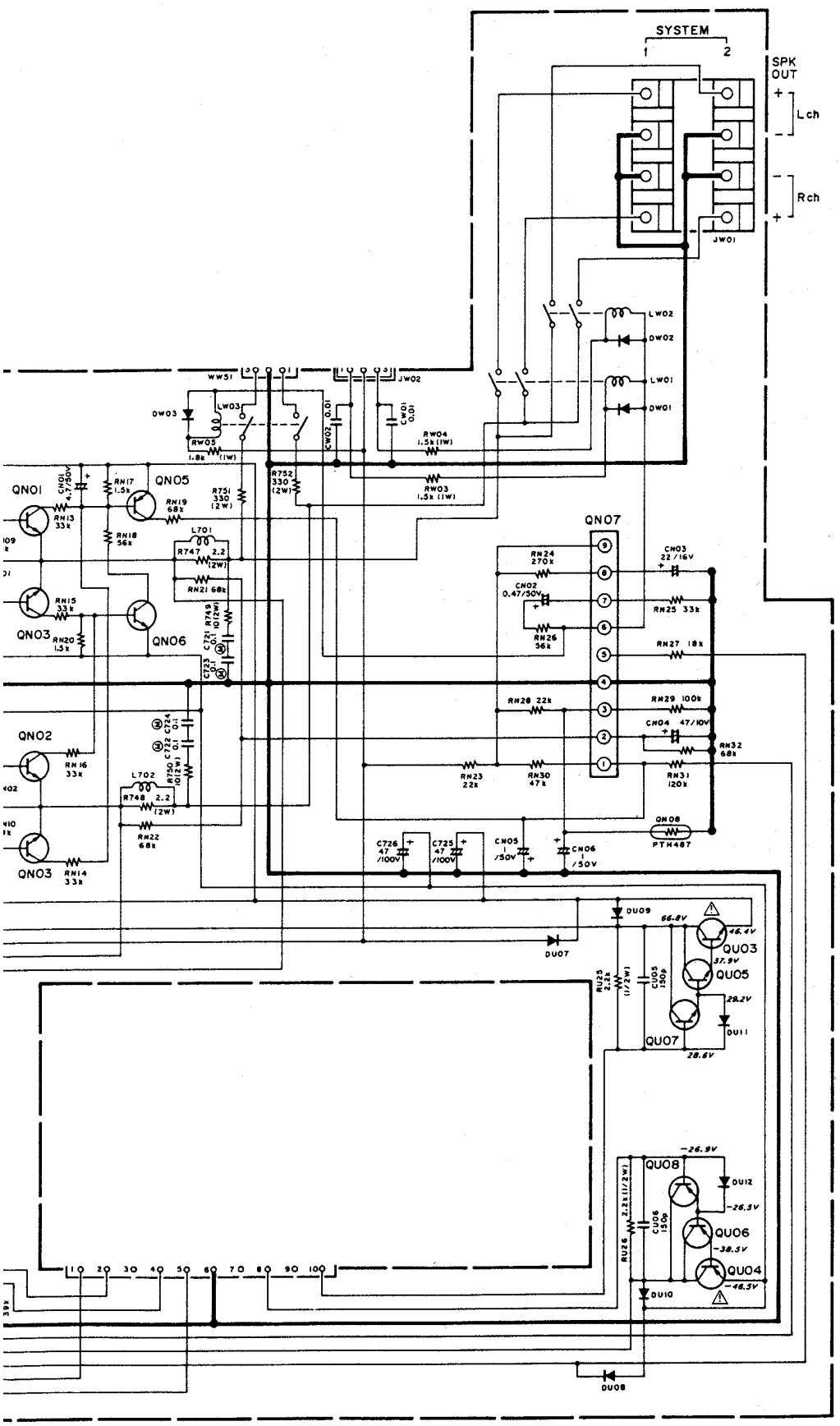

www.rtv-horvat-dj.hr

Mgb 36

8.2 Main Amp/Power Supply (P701) Schematic Diagram and Component Locations

PM-54

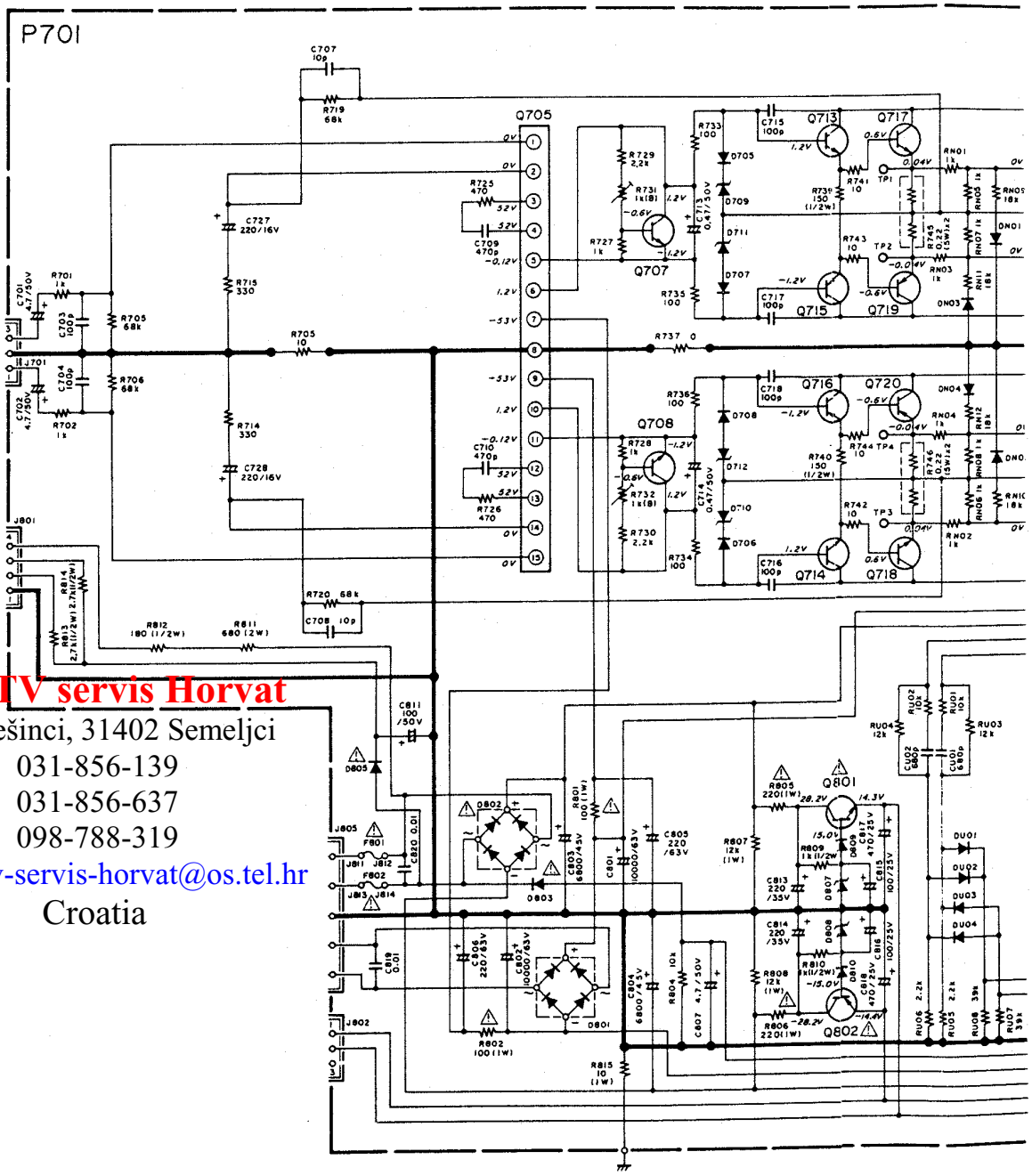

RTV servis Horvat
Kešinci, 31402 Semeljci
031-856-139
031-856-637
098-788-319
rtv-servis-horvat@os.tel.hr
Croatia

www.rtv-horvat-dj.hr

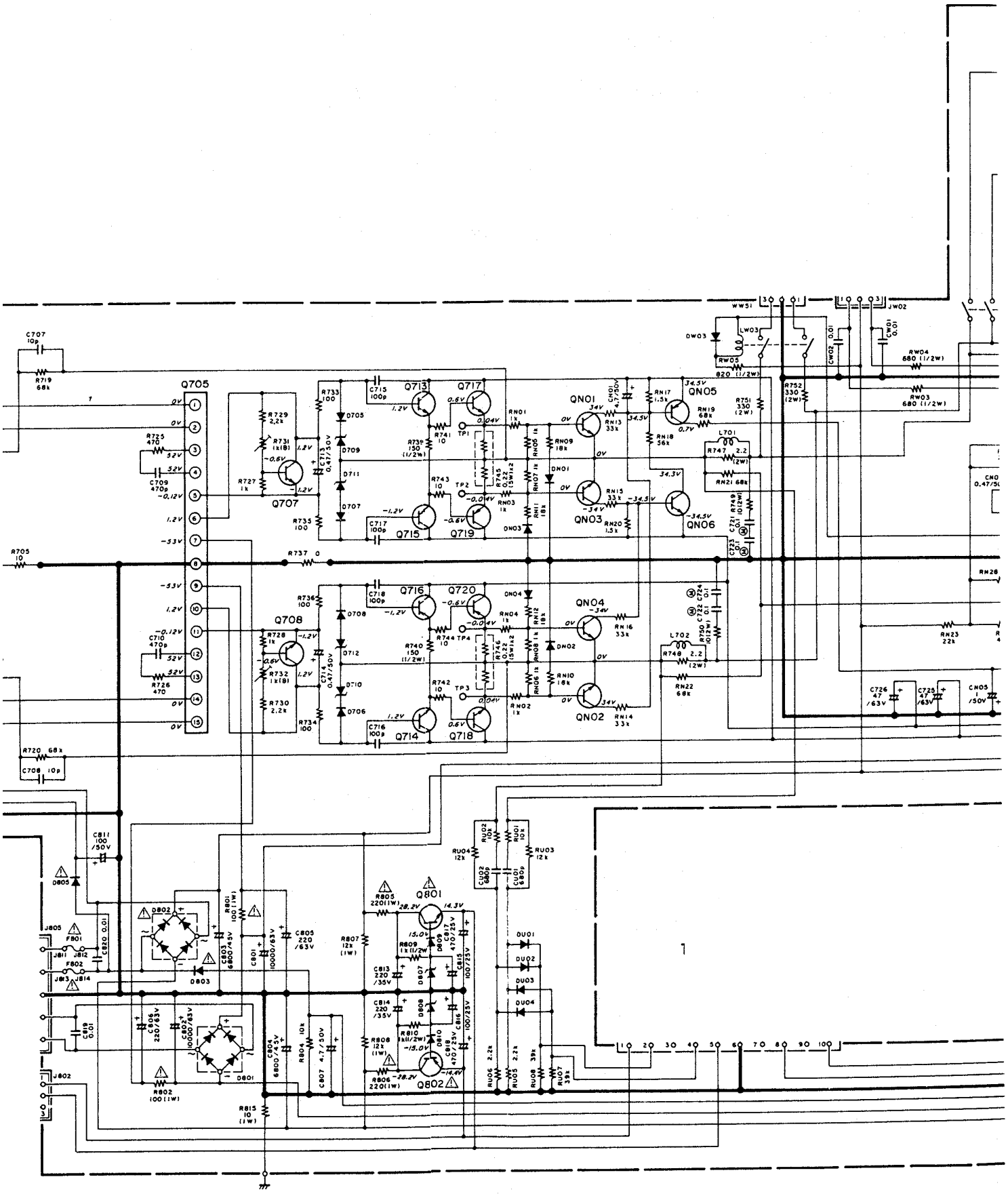

www.rtv-horvat-dj.hr

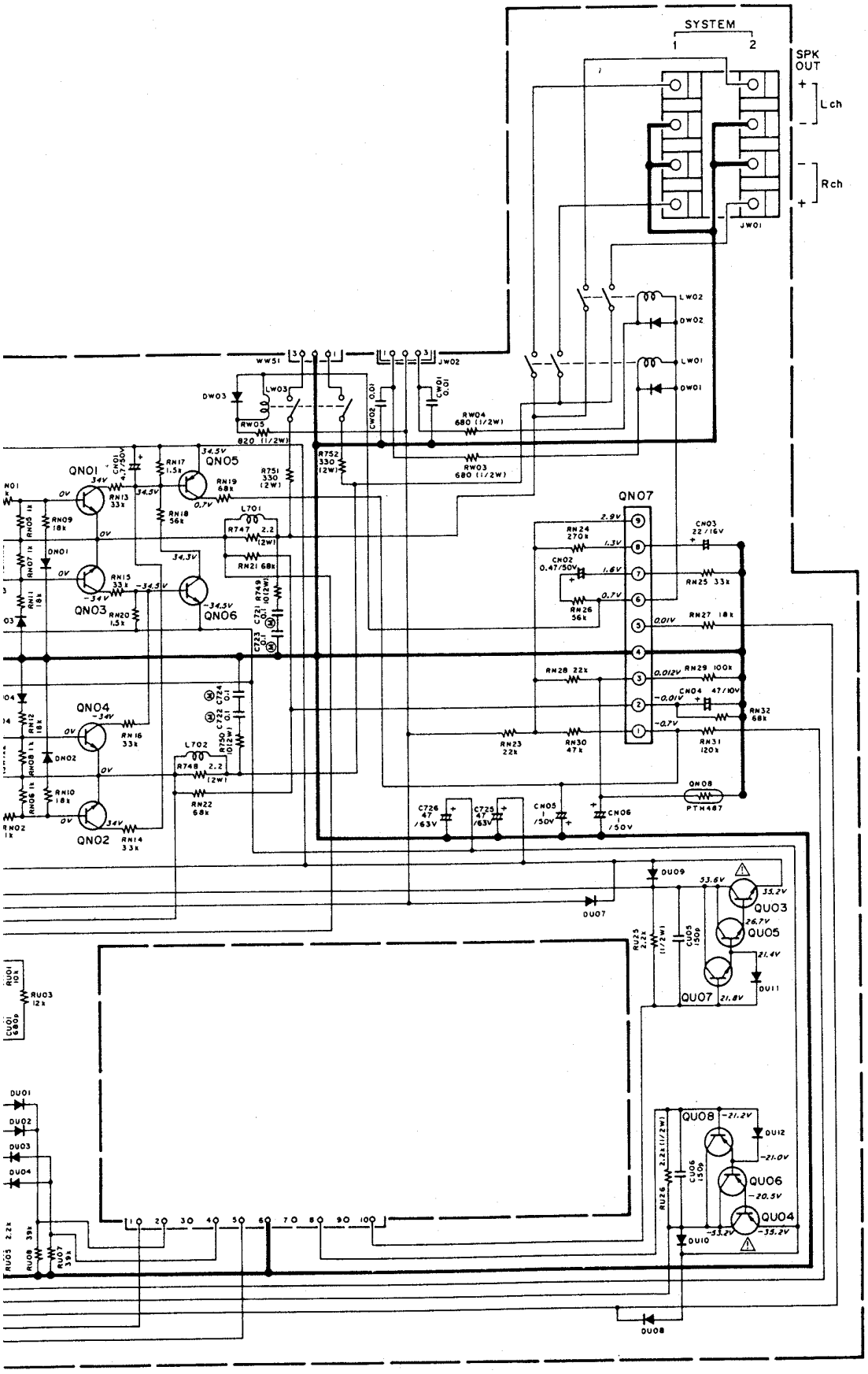

www.rtv-horvat-dj.hr

Mq638

12.SCHEMATIC DIAGRAM

Q401~Q404 HF203691B0 2SK369(BL)
Q405 HC10017090 NJM2043DD
Q707,Q708 QN01,QN02,QN06,QU07,QU53 HT318452B0 2SC1845 (F,E)
Q705 HC10145030 STK3102 II
Q709,Q710 HT326821P0 2SC2682(P)
Q711,Q712 HT111421P0 2SA1142(P)
Q713,(HT332 2SC32

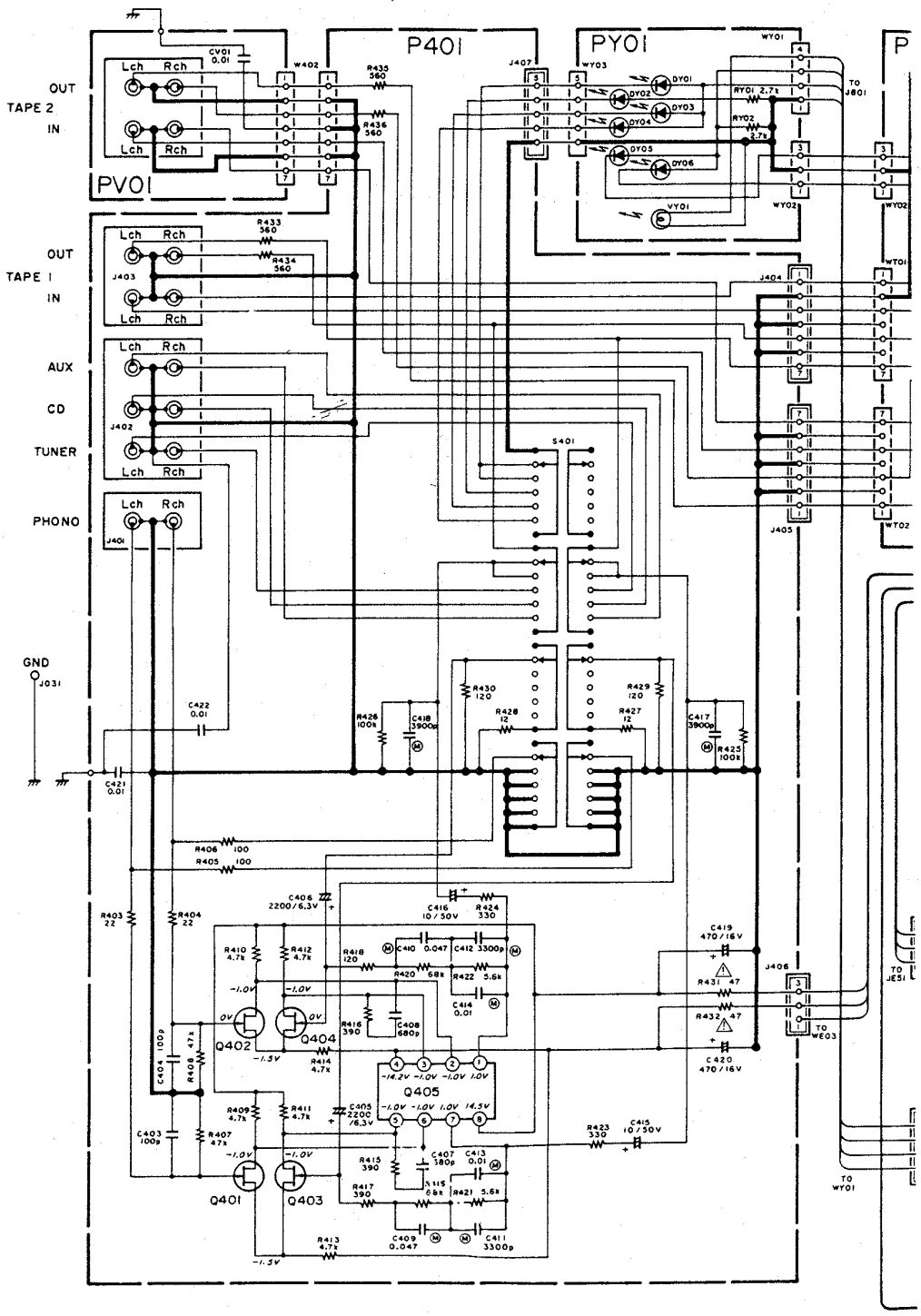

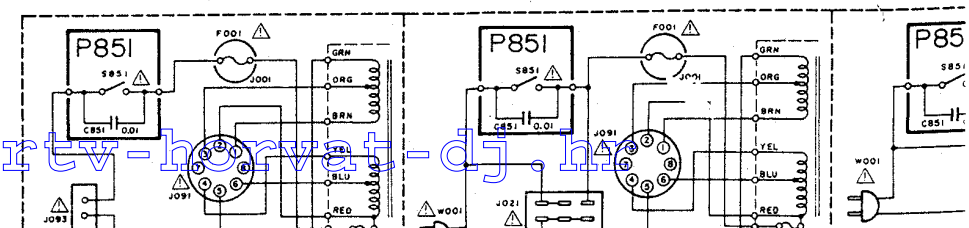

www.rtv-horvat-dj.hr

QU53	Q705	Q709, Q710	Q711, Q712	Q713, Q714	Q715, Q716	Q717, Q718	Q719, Q720	Q801	Q802	QE01	QN03~QN05	QN07
	HC10145030	HT326821P0	HT111421P0	HT332982D0	HT113062D0	HT32774280	HT111702B0	HT412662B0	HT209412B0	HC10026090	QU08, QU54	HC100
	STK3102 II	2SC2682(P)	2SA1142(P)	2SC3298 (O,Y)	2SA1306 (O,Y)	2SC2774 (O,Y)	2SA1170 (O,Y)	2SD1266 (Q,P)	2SB941 (Q,P)	NJM2041D	HT109922B0 2SA992 (F,E)	TA731

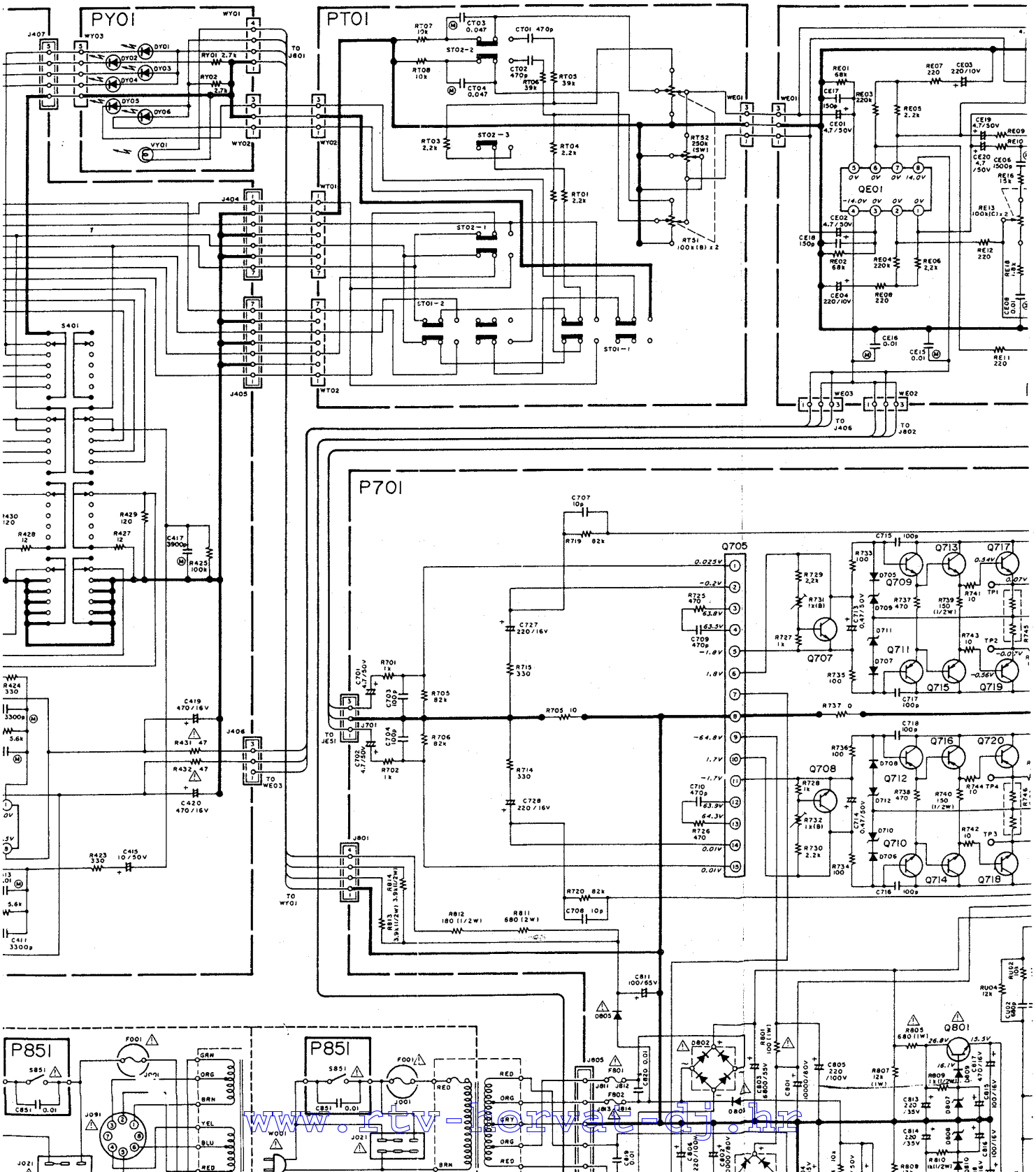

www.itv-horvat-dj.hr

RTV servis Horvat
Kešinci, 31402 Semeljci
031-856-139
031-856-637
098-788-319
rtv-servis-horvat@os.tel.hr
Croatia

Q801	Q802	QE01	QN03~QN05	QN07	QU03	QU04	QU05	QU06	QU51	QU52	DU51
HT412662B0 2SD1266 (Q,P)	HT209412B0 2SB941 (Q,P)	HC10026090 NJM2041D	QU08,QU54 HT109922B0 2SA992 (F,E)	HC10042050 TA7317P	HT413282B0 2SD1238 (R,S)	HT209222B0 2SB922 (R,S)	HT323441D0 2SC2344(D)	HT110111D0 2SA1011(D)	HC10022090 NJM2903D	HC712200A0 HA74LS122P	HD20002 IS2472

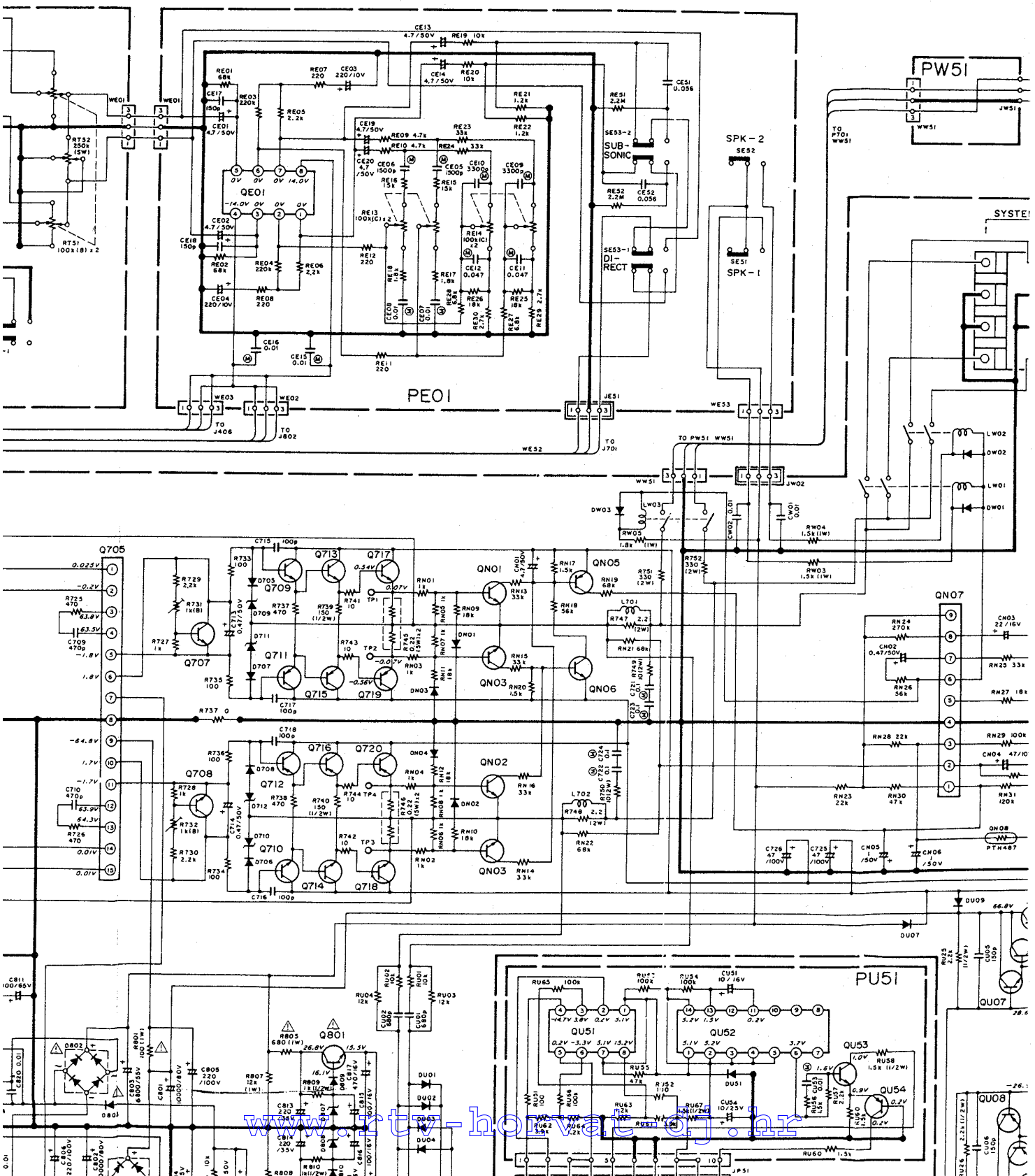

www.rtv-horvat.dj.hr

MODEL PM-64

04 209222B0 B922 (R,S)	QU05 HT32344ID0 2SC2344(D)	QU06 HT11011ID0 2SA1011(D)	QU51 HC10022090 NJM2903D	QU52 HC712200A0 HA74LS122P	DU51 HD20002210 1S2472	D705~D708 D803,DN01~DN04 DU01~DU04,DU11 DU12,DW01~DW03 HD20003210 1S2471

D709~D712
HD30064060
RD6.2E

D805
DU09,DU10
HD20022030
DSF10C

D801
HE20013290
D5FB20

D802
HD20008290
S4VB20

D807,D808
HD30051060
RD16E

DU07,DU08
HD20011290
S3VB20

DY01~DY06
HI10028320
GL-9HD4

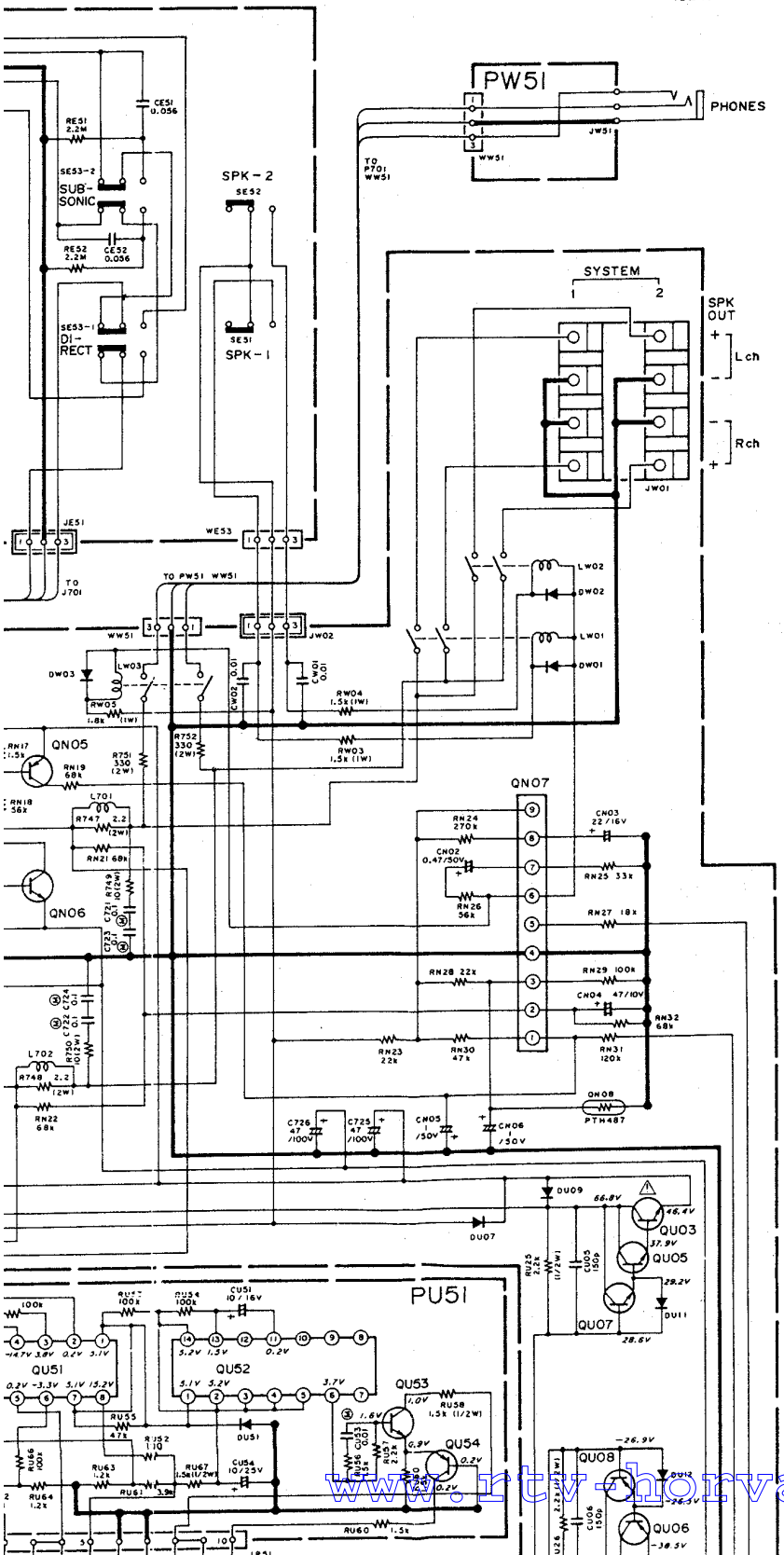

www.rtv-hrvat-dj.hr

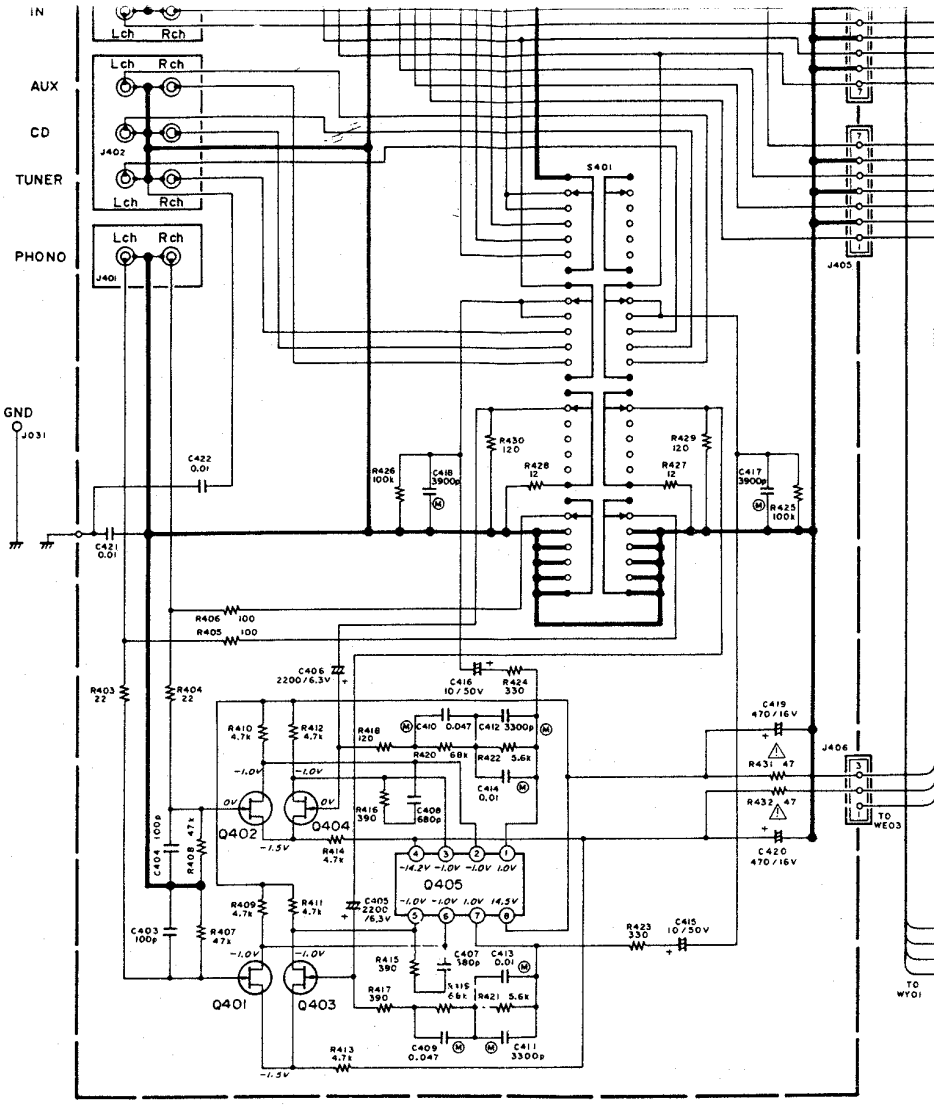

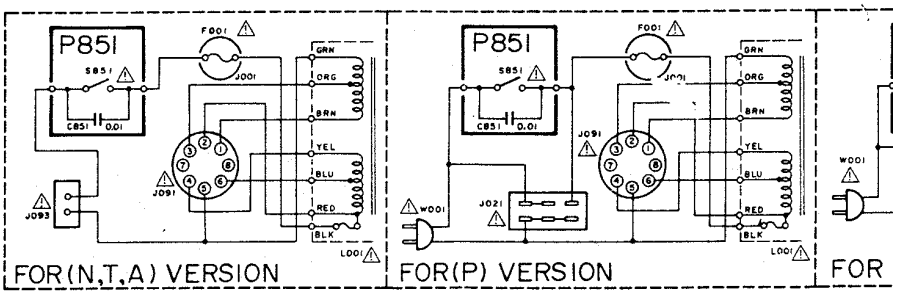

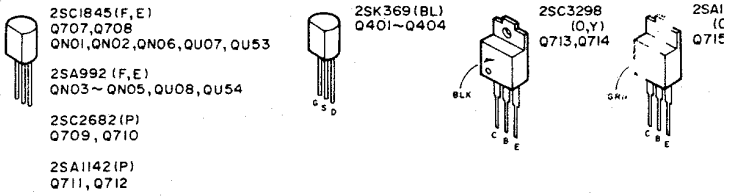

NOTE ON SAFETY:

Symbol ⚠ Fire or electrical shock hazard. Only original parts should be used to replace any part marked with symbol ⚠. Any other component substitution (other than original type), may increase risk of fire or electrical shock hazard.

www.rtv-horvat-dj.hr

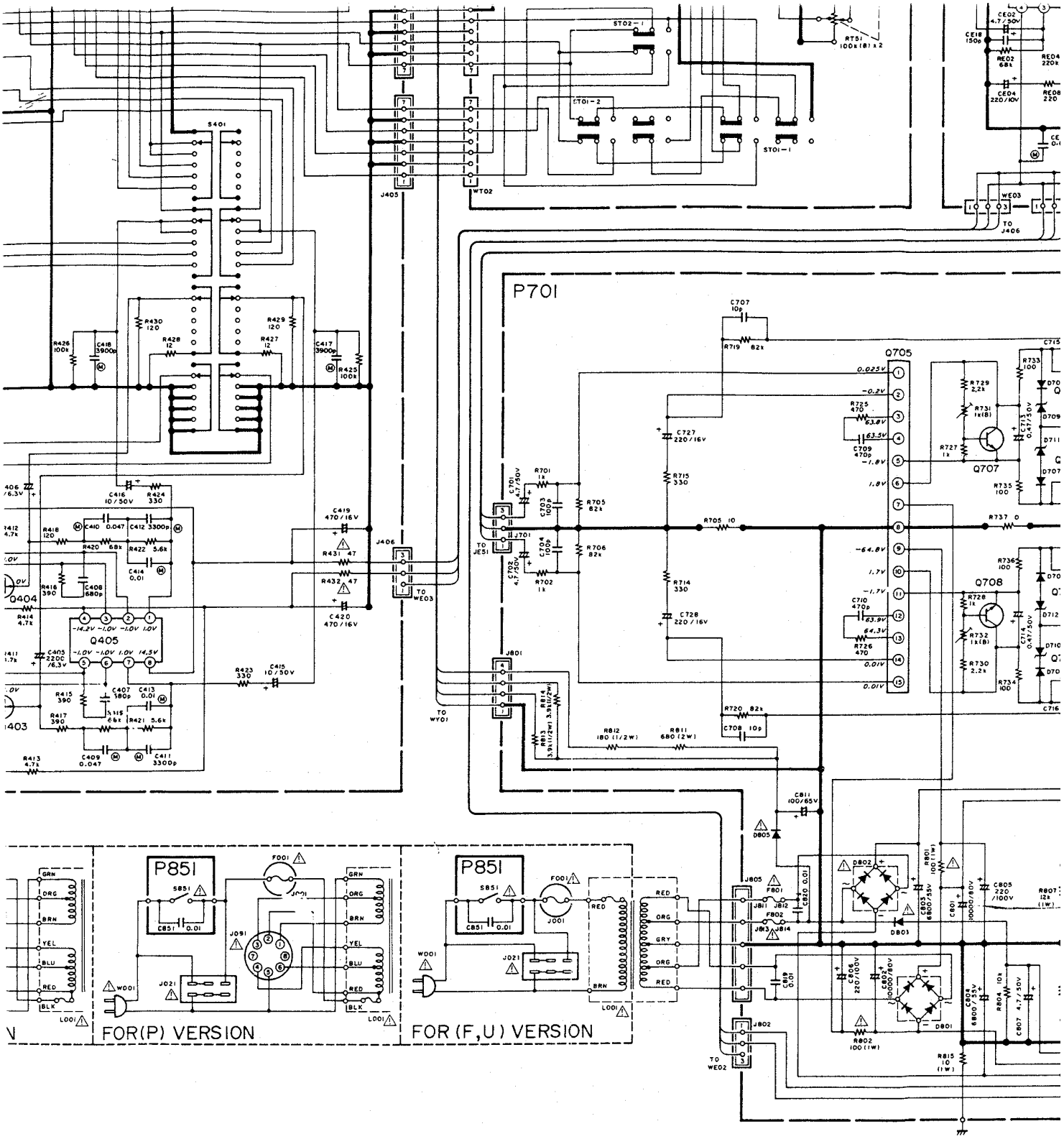

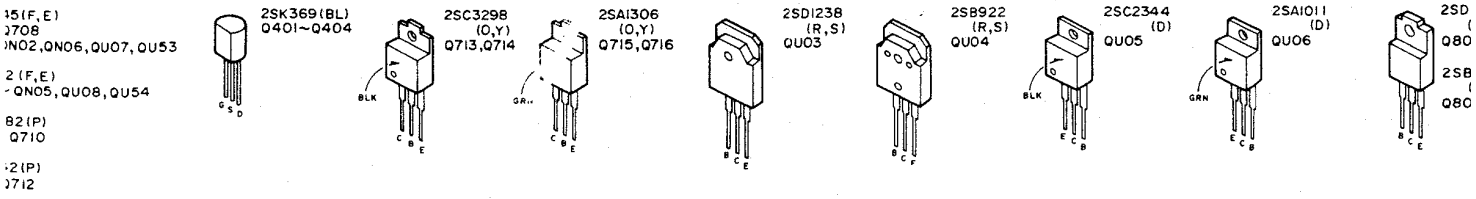

: ON SAFETY:

ol ⚠ Fire or electrical shock hazard. Only original parts
d be used to replace any part marked with symbol ⚠ .
other component substitution (other than original
may increase risk of fire or electrical shock hazard.

www.rtv-horvat-dj.hr

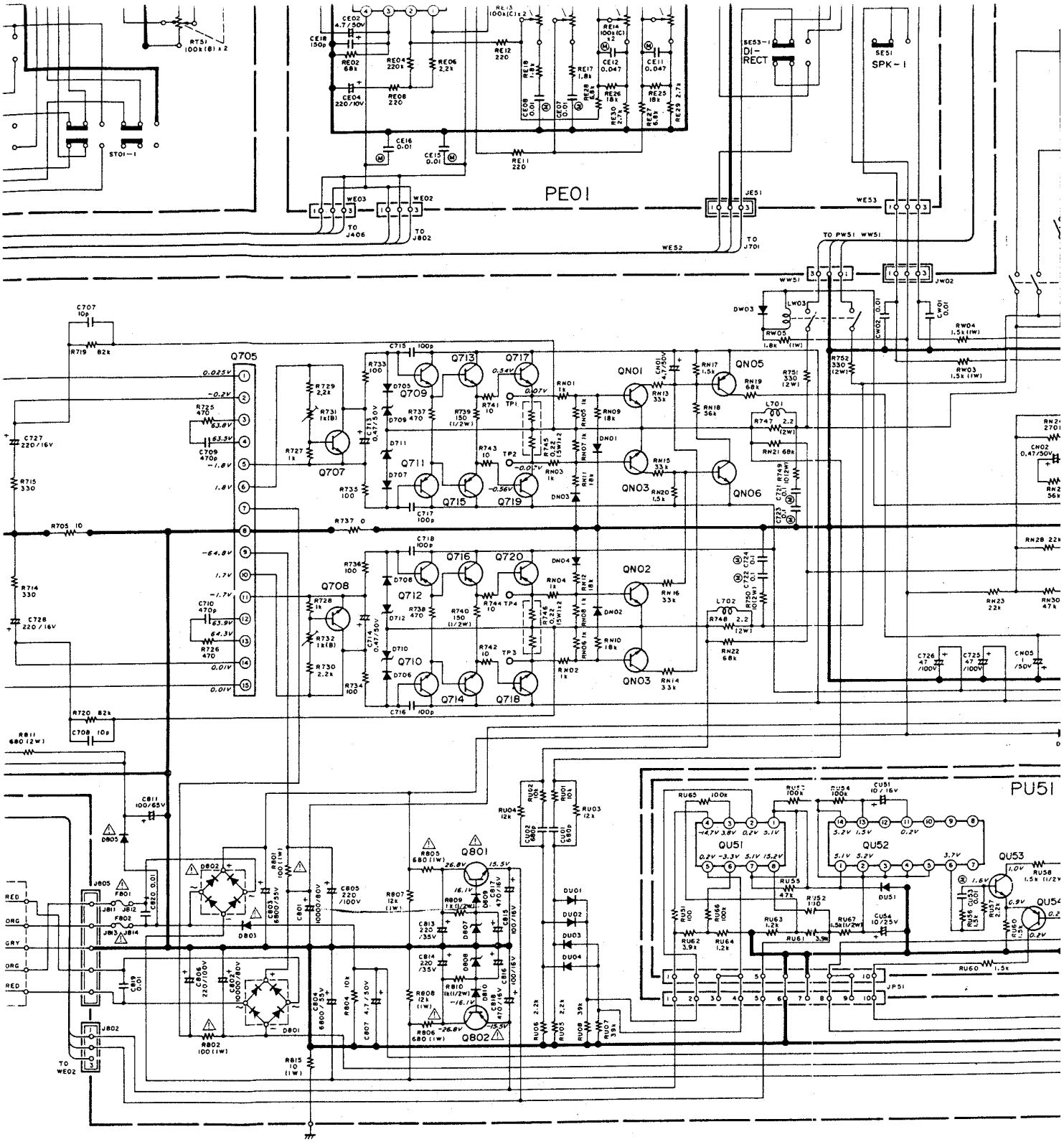

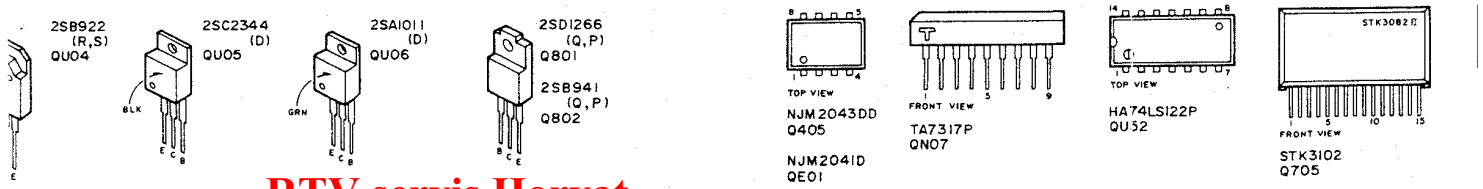

RTV servis Horvat
Kešinci, 31402 Semeljci
031-856-139
031-856-637
098-788-319
rtv-servis-horvat@os.tel.hr
Croatia
www.rtv-horvat-dj.hr

Components and wiring are subject to change for

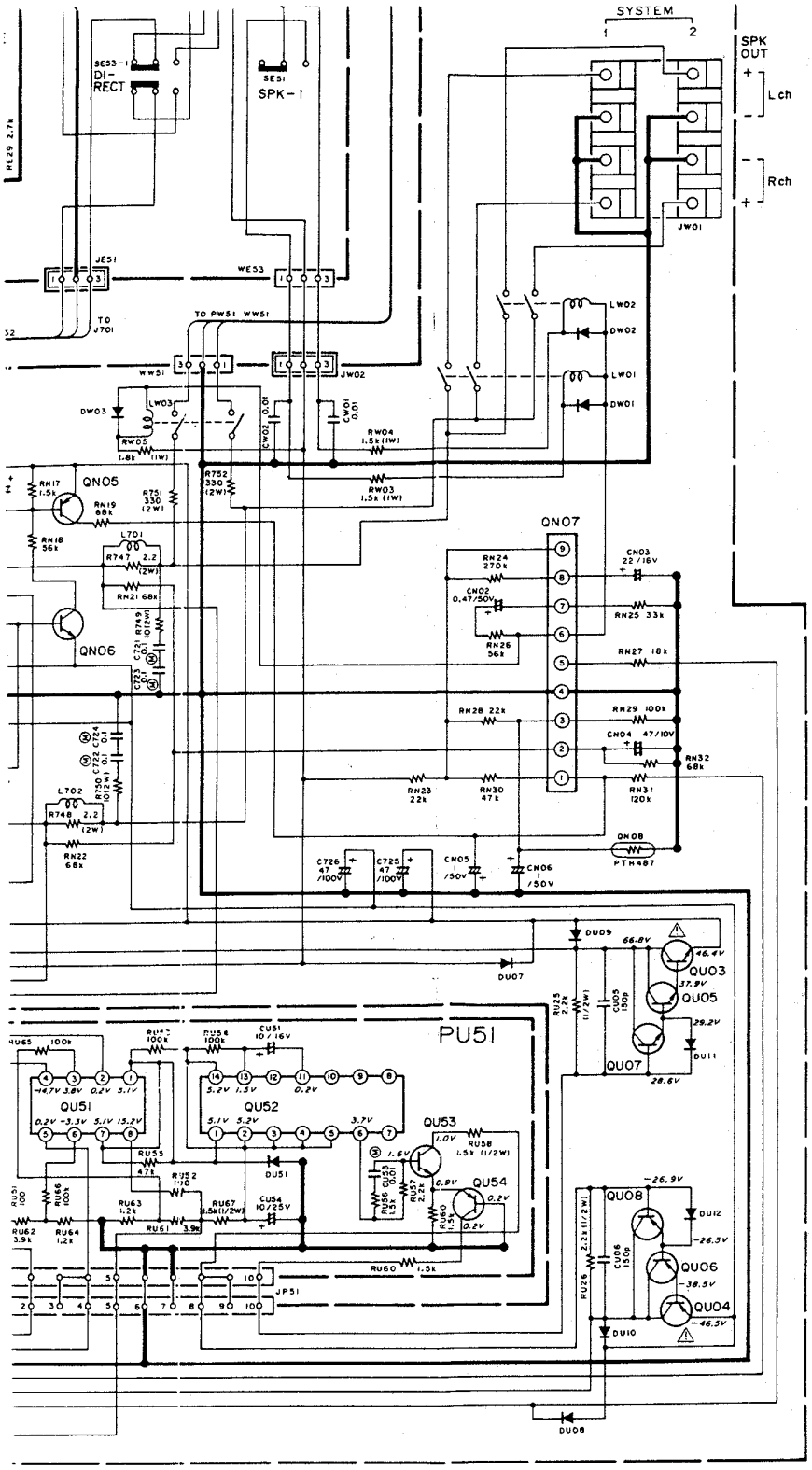

Components and wiring are subject to change for modification without notice.

www.rtv-horvat-dj.hr

Q401~Q404	Q405	Q707,Q708	Q705	Q713,Q714	Q715,Q716	Q717,Q
HF2036918O	HC10017090	QN01,QN02,QN06,QU07,QU53	HC10145030	HT332982DO	HT113062DO	HT327
2SK369(BL)	NJM2043DD	HT318452BO	STK3102II	2SC3298 (O,Y)	2SA1306 (O,Y)	2SC27
		2SC1845(F,E)				

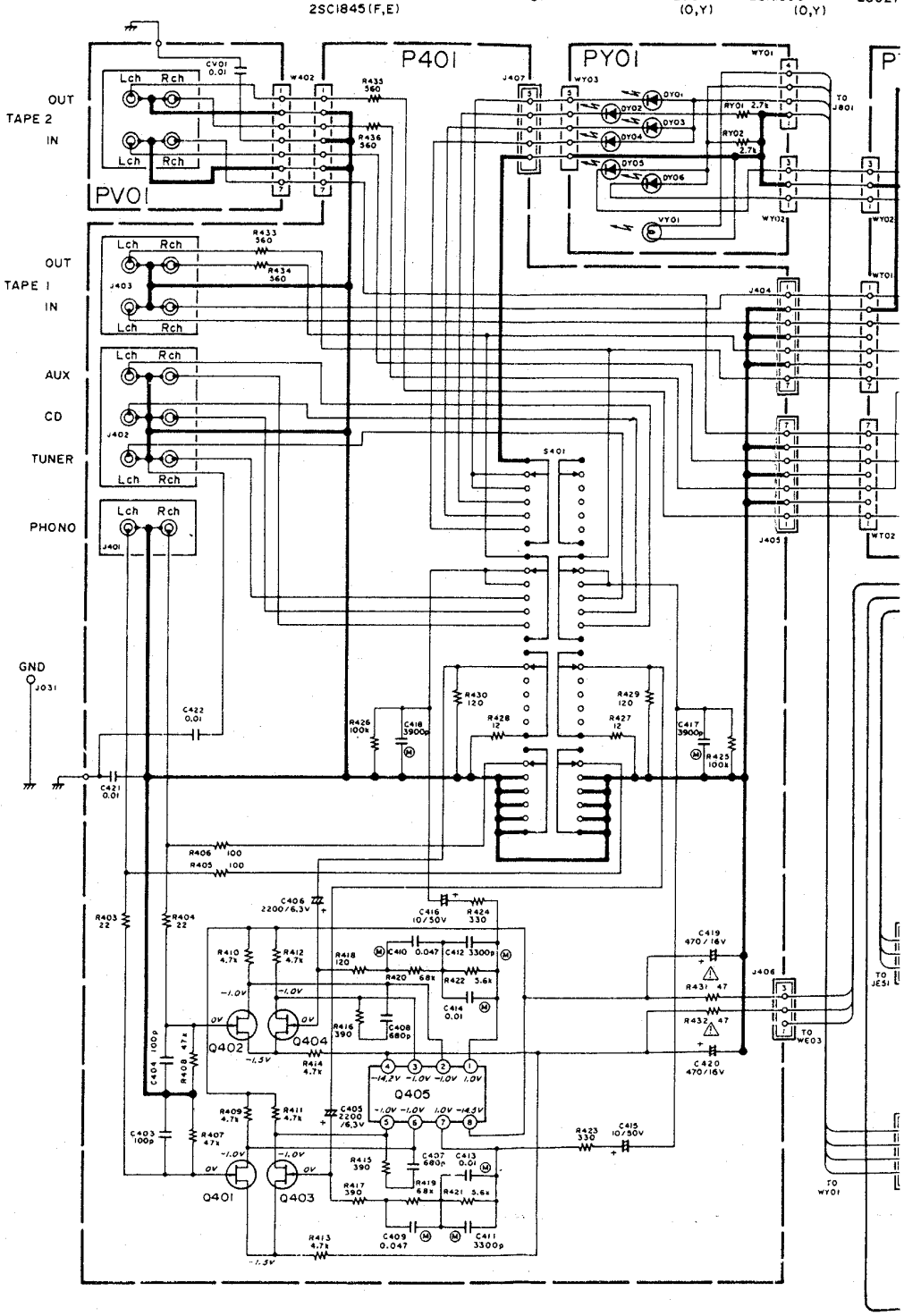

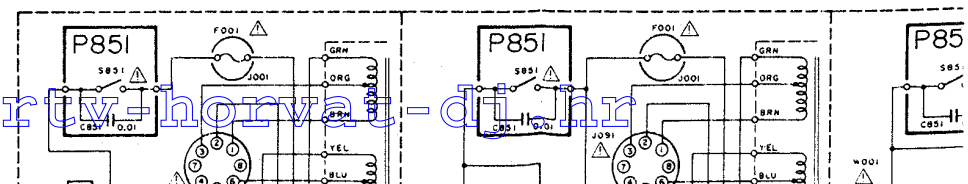

www.rtv-horvat-di.hr

Q707,Q708
QN01,QN02,QN06,QU07,QU53
HT318452B0
2SC1845(F,E)

Q705
HC10145030
STK3102Ⅱ

Q713,Q714
HT332982D0
2SC3298
(O,Y)

Q715,Q716
HT113062D0
2SA1306
(O,Y)

Q717,Q718
HT327732B0
2SC2773
(O,Y)

Q719,Q720
HT111692B0
2SA1169
(O,Y)

Q801
HT412662B0
2SD1266
(Q,P)

Q802
HT209412B0
2SB941
(Q,P)

QE01
HC10026090
NJM2041D

QN03～QN05
QU08,QU54
HT109922B0
2SA992
(F,E)

QN07
HC10042050
TA7317P

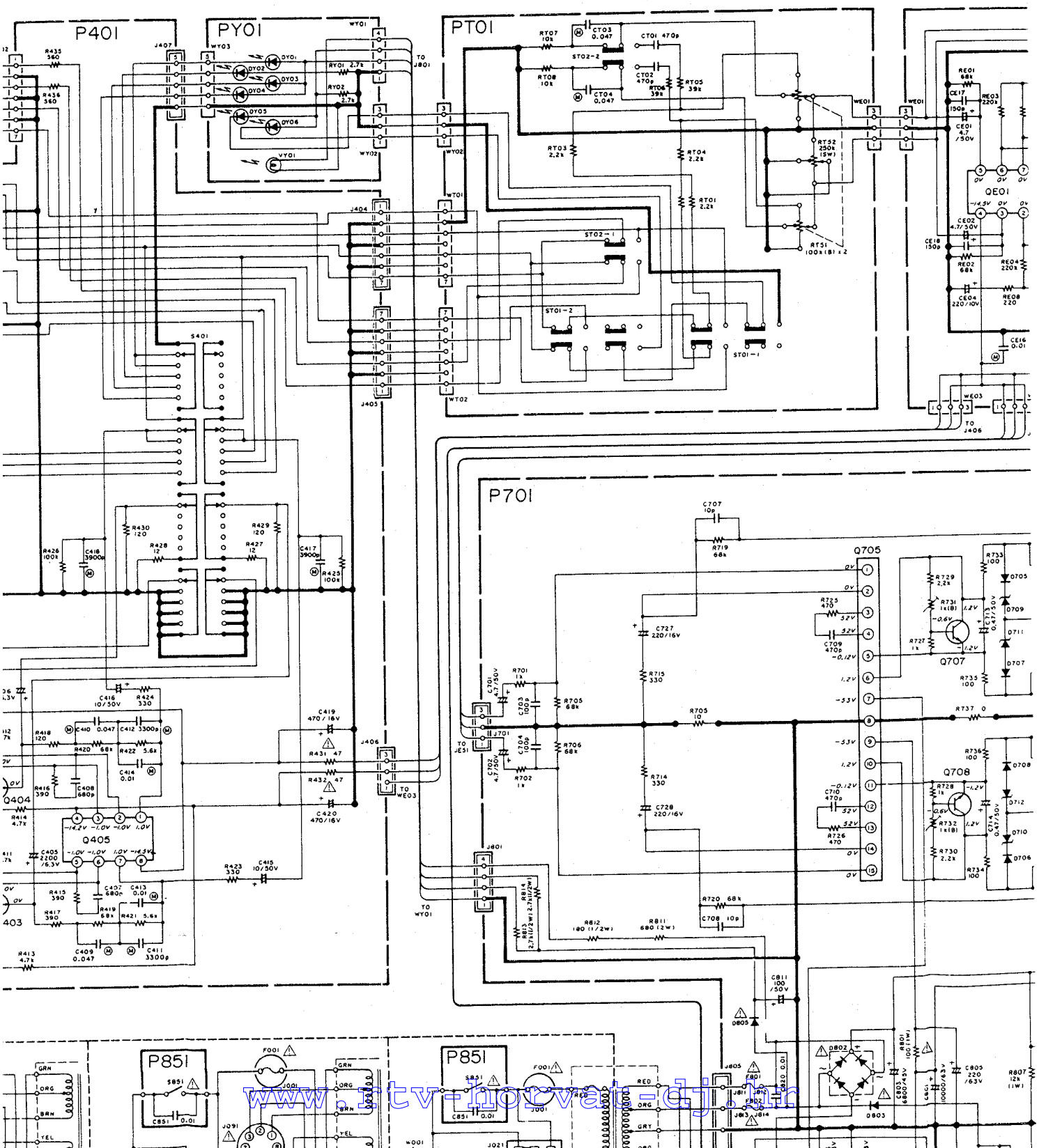

www.rtv-horvat-dj.hr

RTV servis Horvat
Kešinci, 31402 Semeljci
031-856-139
031-856-637
098-788-319
rtv-servis-horvat@os.tel.hr
Croatia

802 IT209412B0 2SB941 (Q,P)	QE01 HC10026090 NJM2041D	QN03 ~ QN05 QU08,QU54 HT109922B0 2SA992 (F,E)	QN07 HC10042050 TA7317P	QU03 HT41238280 2SD1233 (R,S)	QU04 HT20992280 2SB992 (R,S)	QU05 HT323441D0 2SC2344(D)	QU06 HT110111D0 2SA1011(D)	QU51 HC10022090 NJM29030	QU52 HC712200A0 HA74LS122P	DU51 HD20002210 1S2472	D705 ~ D708 D803,DN01~ DN0 DU01~DU04,DU11 DU12,DW01~ DW0 HD20003210 1S2471

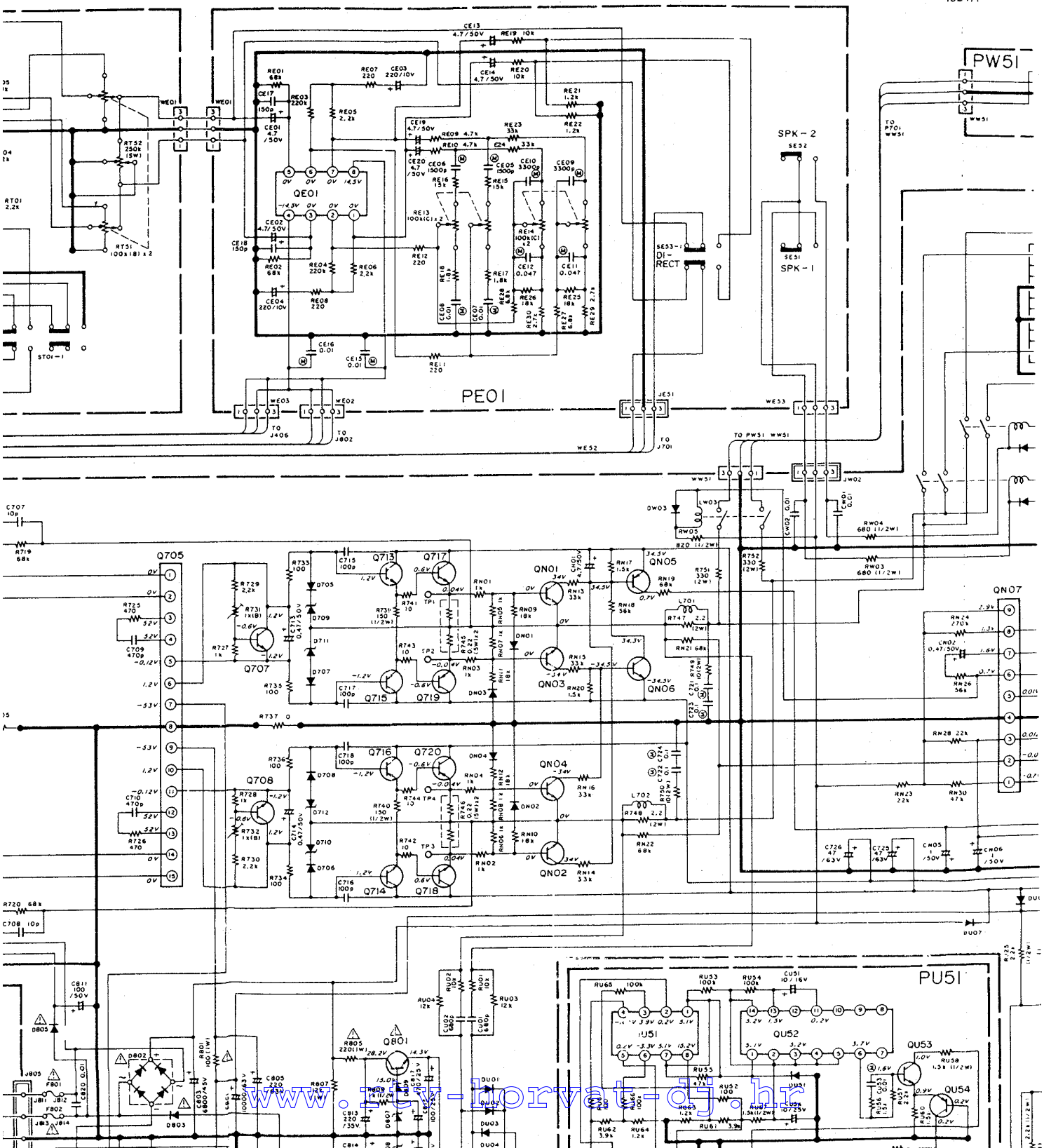

www.rtv-horvat-dj.hr

MODEL PM-54

QU51 HC10022090 NJM2903D	QU52 HC712200A0 HA74LS122P	DU51 HD20002210 IS2472	D705 ~ D708 D803, DN01 ~ DN04 DU01 ~ DU04, DU11 DU12, DW01 ~ DW03 HD20003210 IS2471	D709 ~ D712 HD30064060 RD6.2E	D805 DU09, DU10 HD20022030 DSF10C

D801
HE2009290
S5VB20

D802
HD20008290
S4VB20

D807, D808
HD30051060
RD16E

DU07, DU08
HD20011290
S3VB20

DY01 ~ DY06
H110028320
GL-9HD4

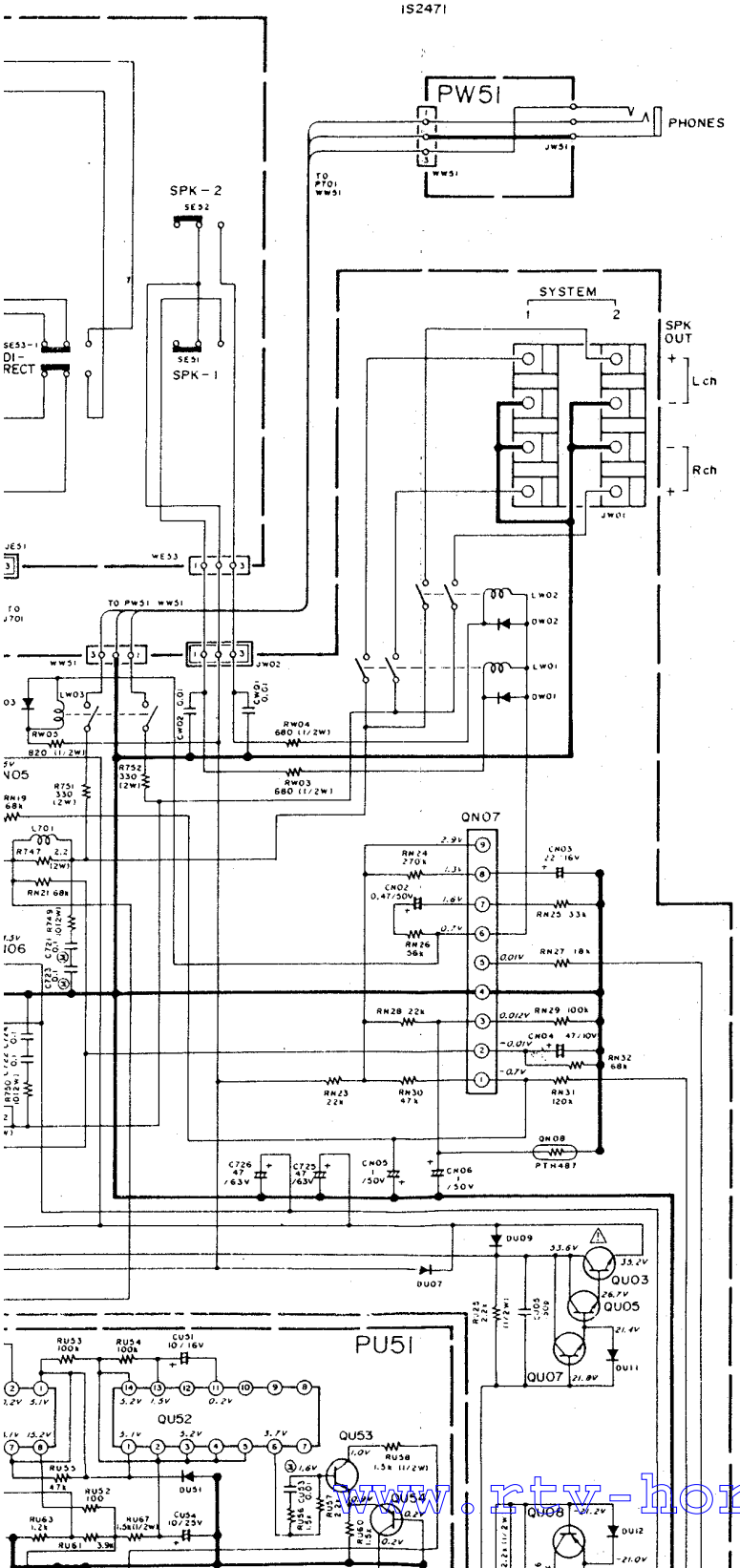

www.rtv-horvat-dj.hr

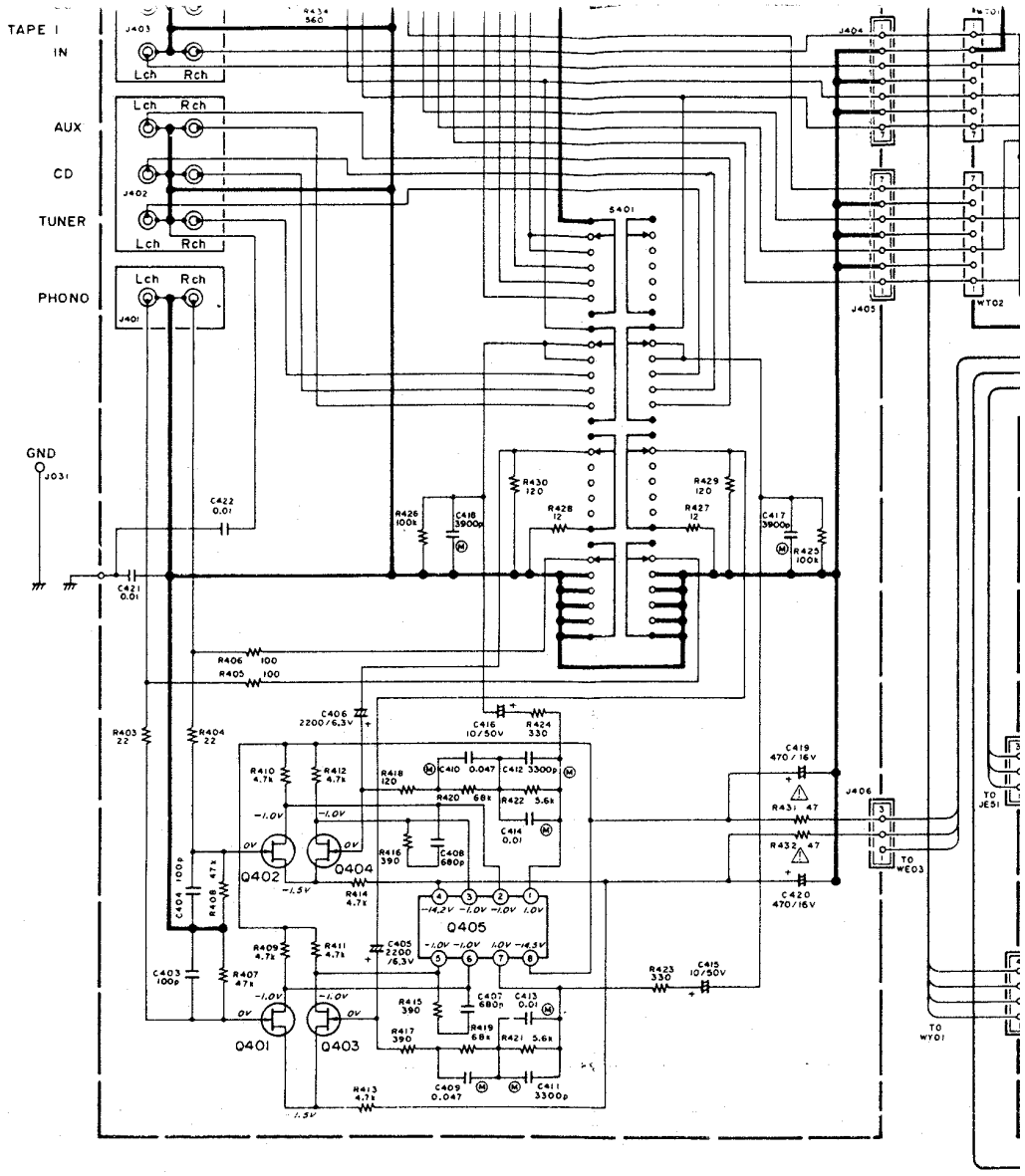

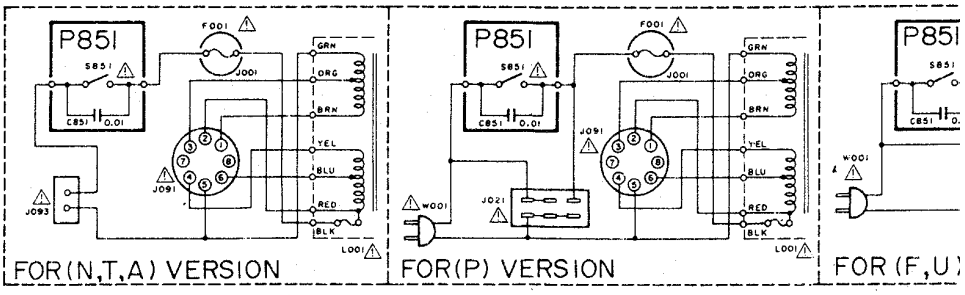

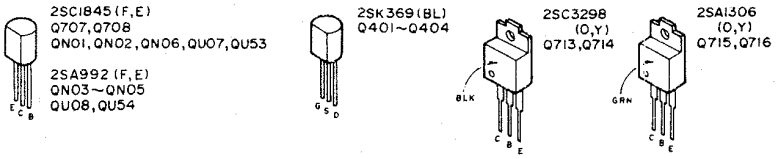

NOTE ON SAFETY:

Symbol ⚠ Fire or electrical shock hazard. Only original parts should be used to replace any part marked with symbol ⚠. Any other component substitution (other than original type), may increase risk of fire or electrical shock hazard.

www.rtv-hovat-dj.hr

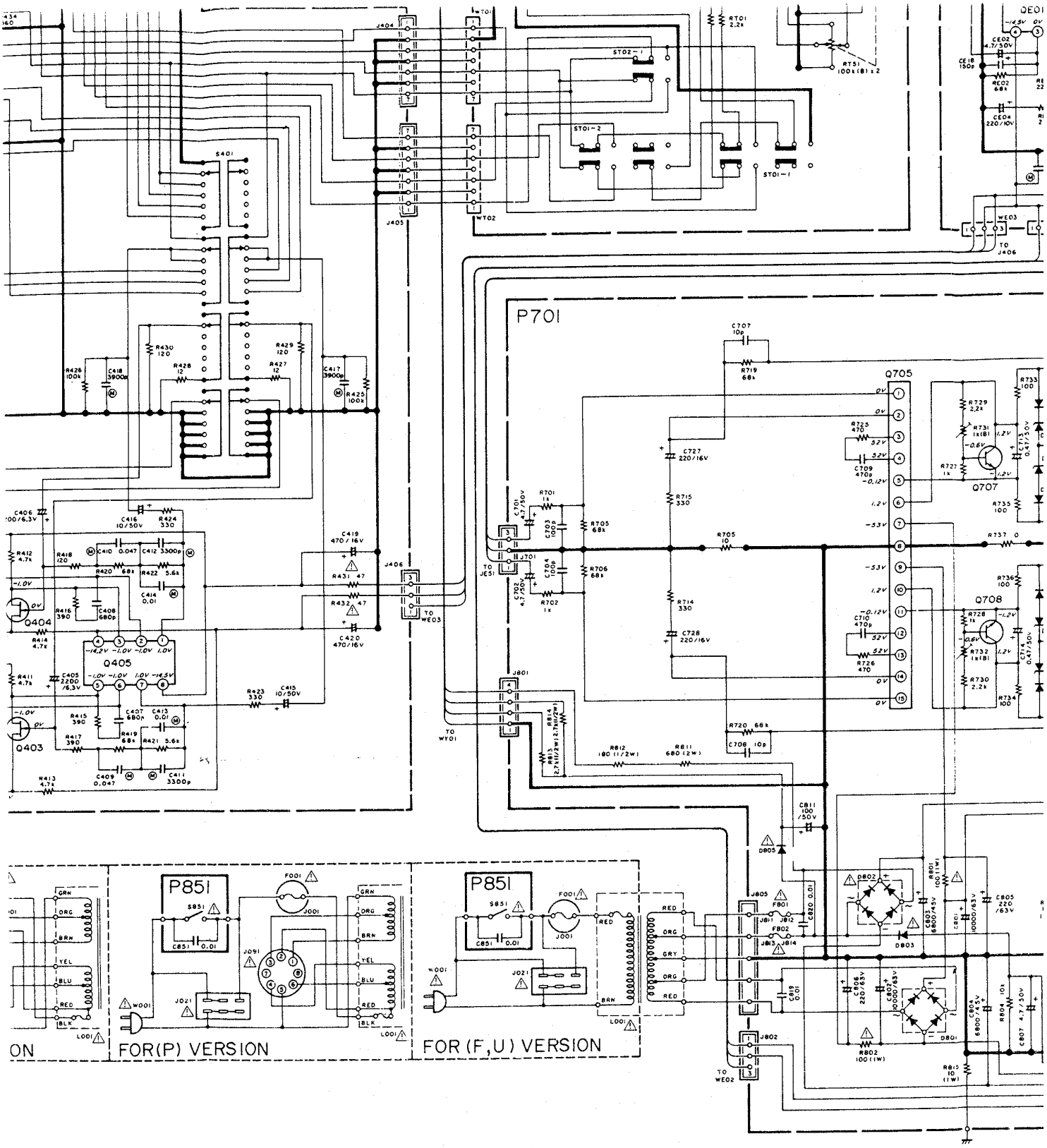

1845 (F,E)
7,Q708
1,QN02,QN06,QU07,QU53

992 (F,E)
3~QN05
8,QU54

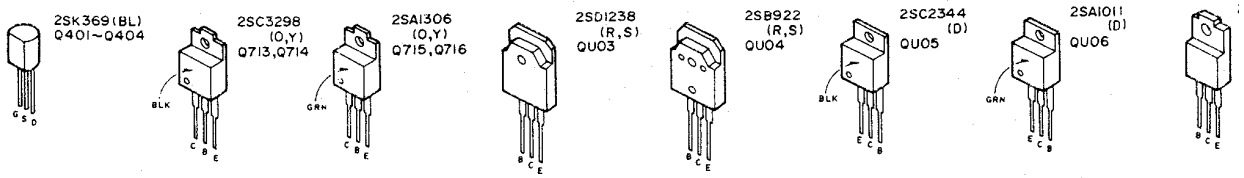

ON SAFETY:

1 ⚠ Fire or electrical shock hazard. Only original parts
be used to replace any part marked with symbol ⚠.
ther component substitution (other than original
may increase risk of fire or electrical shock hazard.

www.rtv-horvat-dj.hr

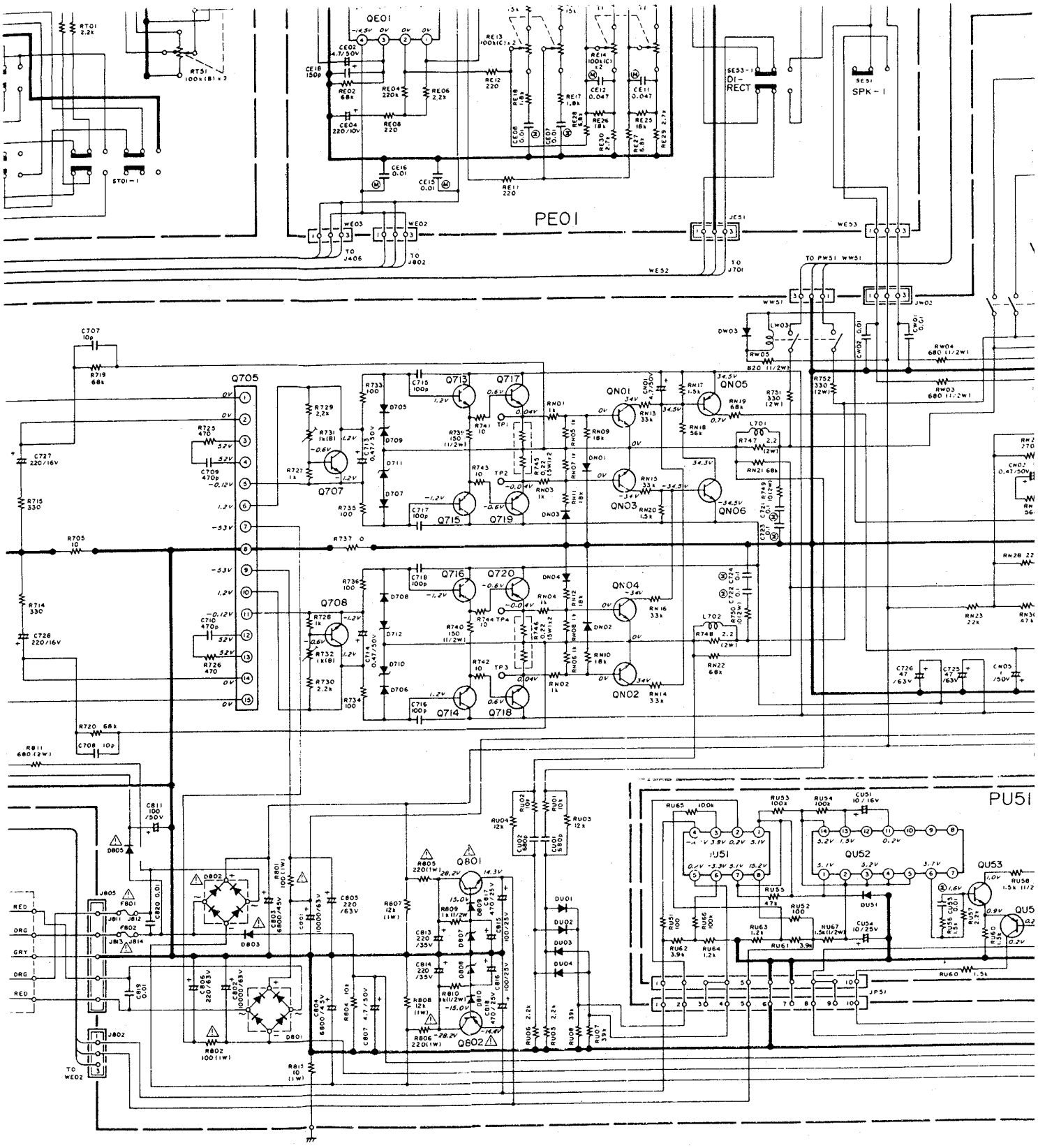

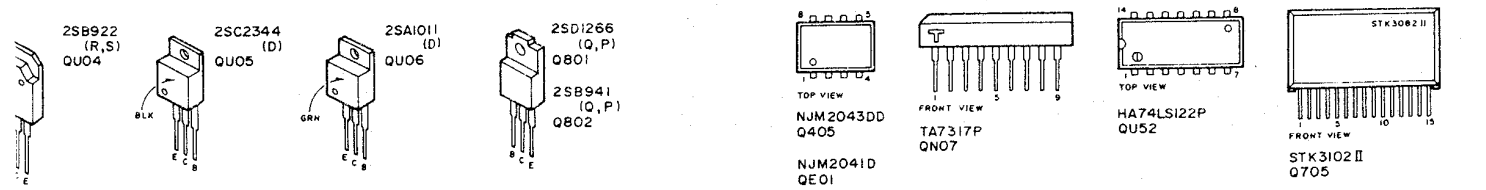

Components and wiring are subject to change for mod

www.rtv-horvat-dj.hr

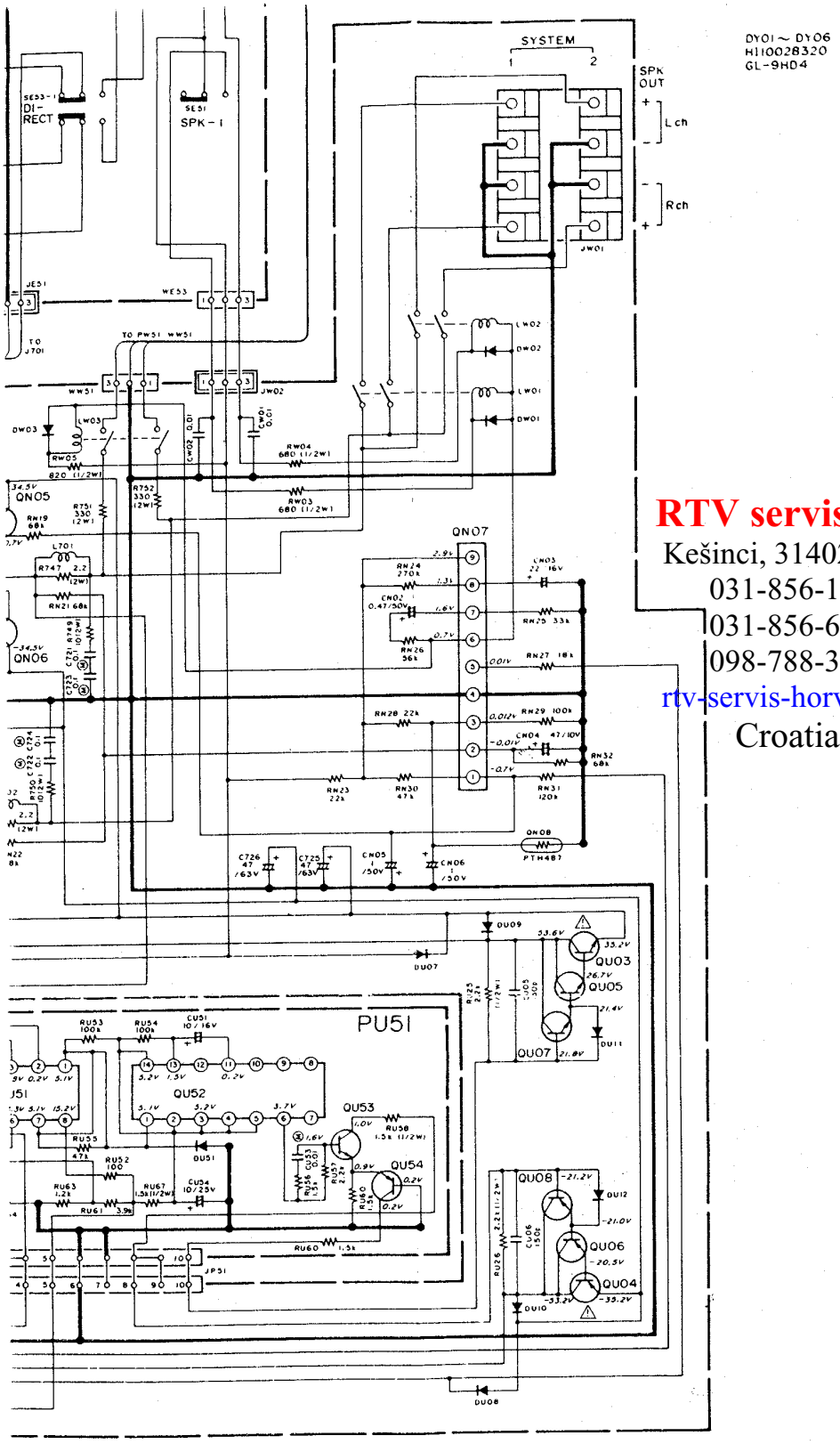

RTV servis Horvat
Kešinci, 31402 Semeljci
031-856-139
031-856-637
098-788-319
rtv-servis-horvat@os.tel.hr
Croatia

ents and wiring are subject to change for modification without notice.

www.rtv-horvat-dj.hr